MITSUBISHI HEAVY INDUSTRIES
AIR CONDITIONING EUROPE



# SRK50ZSX-WFB / SRC50ZSX-W3

**5.0 (1.0~6.2)**

Indoor Unit : SRK50ZSX-WFB Outdoor Unit : SRC50ZSX-W3

R32

## Specifications

| | | | | |
|---|---|---|---|---|
| Indoor unit | | | | SRK50ZSX-WFB |
| Outdoor unit | | | | SRC50ZSX-W3 |
| Power source | | | | 1Phase, 220 - 240, 50Hz |
| Nominal cooling capacity (Min~Max) | | | kW | 5.0 (1.0~6.2) |
| Nominal heating capacity (Min~Max) | | | kW | 6.0 (0.8~8.2) |
| Power consumption | | Cooling/Heating | kW | 1.24 / 1.36 |
| EER/COP | | Cooling/Heating | | 4.03 / 4.41 |
| Max. running current | | | A | 15 |
| Sound power level | Indoor | Cooling/Heating | dB(A) | 59 / 62 |
| | Outdoor | Cooling/Heating | | 63 / 61 |
| Sound pressure level | Indoor | Cooling (Hi/Me/Lo/Ulo) | | 44 / 39 / 31 / 22 |
| | | Heating (Hi/Me/Lo/Ulo) | | 47 / 41 / 33 / 23 |
| | Outdoor | Cooling/Heating | | 51 / 49 |
| Air flow | Indoor | Cooling (Hi/Me/Lo/Ulo) | m3/min | 14.3 / 12.4 / 7.8 / 5.4 |
| | | Heating (Hi/Me/Lo/Ulo) | | 17.3 / 14.3 / 9.8 / 6.2 |
| | Outdoor | Cooling/Heating | | 39.0 / 33.0 |
| Exterior Dimensions | Indoor | Height x Width x Depth | mm | 305 x 920 x 220 |
| | Outdoor | | | 640 x 800(+71) x 290 |
| Net weight | Indoor / Outdoor | | kg | 13.0 / 45.0 |
| Refrigerant | | Type/GWP | | R32 / 675 |
| Refrigerant | | Charge | kg/TCO2Eq | 1.30 / 0.878 |
| Refrigerant piping size | | Liquid/Gas | mm (ø inch) | 6.35(1/4") / 12.7(1/2") |
| Refrigerant line (one way) length | | | m | Max.30 |
| Vertical height differences | | Outdoor is higher/lower | m | Max.20 / Max.20 |
| Outdoor operating temperature range | | Cooling | °C | -15~46 |
| | | Heating | | -20~24 |
| Clean filter | | | | Allergen Clear Filter x 1, Photocatalytic Washable Deodorizing Filter x 1 |
| Energy Class (Cooling/Heating) | | | | A++/A++ |
| SEER | | | | 8.30 |
| SCOP (Average climate) | | | | 4.70 |
| Pdesign (cooling/heating(@-10°C)) | | | kW | 5.00/4.50 |
| Annual Electricity Consumption (cooling/heating) | | | kWh/a | 211/1341 |
| Designated Heating Season | | | | Average |

• The data is measured under the following conditions(ISO-T1, H1). Cooling: Indoor temp. of 27°CDB, 19°CWB, and outdoor temp. of 35°CDB. Heating: Indoor temp. of 20°CDB, and outdoor temp. of 7°CDB, 6°CWB.
• Sound level indicates the value in an anechoic chamber. During operation these values are somewhat higher due to ambient conditions.
• 'tonne(s) of CO2 equivalent' means a quantity of greenhouse gases- expressed as the product of the weight of the greenhouse gases in metric tonnes and of their global warming potential.
*1 The maximum external static pressure can be used up to 35Pa (25•35ZS) , 50Pa (50 •60ZS), but the airflow will be reduced.

## Schematics

**SRK20ZSX-WF, -WFB, -WFT, -W**
**SRK25ZSX-WF, -WFB, -WFT, -W**
**SRK35ZSX-WF, -WFB, -WFT, -W**
**SRK50ZSX-WF, -WFB, -WFT, -W**
**SRK60ZSX-WF, -WFB, -WFT, -W**
**SRK20ZSX-S SRK25ZSX-S SRK35ZSX-S**
**SRK50ZSX-S SRK60ZSX-S**

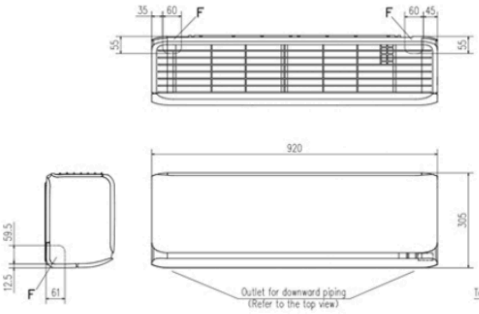


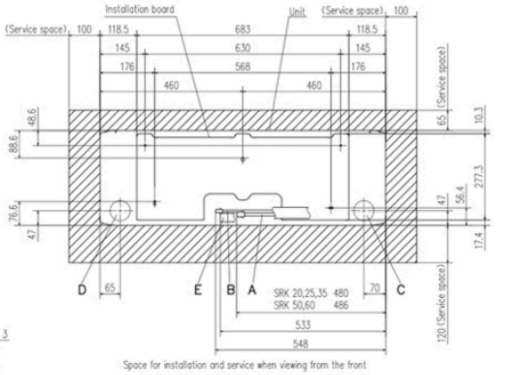


| Symbol | Content | |
|---|---|---|
| A | Gas piping | SRK 20,25,35 ø9.52 (3/8") (Flare)<br>SRK 50,60 ø12.7 (1/2") (Flare) |
| B | Liquid piping | ø6.35 (1/4") (Flare) |
| C | Hole on wall for right rear piping | (ø65) |
| D | Hole on wall for left rear piping | (ø65) |
| E | Drain hose | VP16 |
| F | Outlet for piping | |

| Symbol | Content | |
|---|---|---|
| A | Service valve connection (Gas side) | ϕ12.7 (1/2") (Flare) |
| B | Service valve connection (Liquid side) | ϕ6.35 (1/4") (Flare) |
| C | Pipe/cable draw-out hole | |
| D | Drain discharge hole | ϕ20×5 places |
| E | Anchor bolt hole | M10-12×4 places |

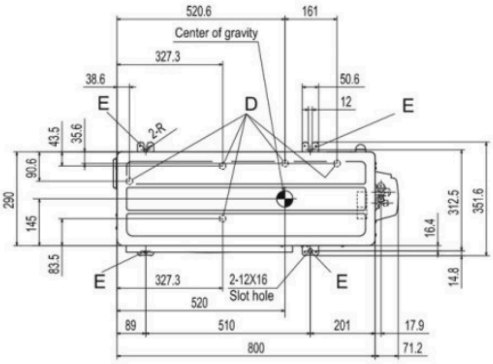


Notes
(1) The unit must not be surrounded by walls on the four sides.
(2) The unit must be fixed with anchor bolts. An anchor bolt must not protrude more than 15mm.
(3) If the unit is installed in the location where there is a possibility of strong winds, place the unit such that the direction of air from the outlet gets perpendicular to the wind direction.
(4) Leave 200mm or more space above the unit.
(5) The wall height on the outlet side should be 1200mm or less.
(6) The model name label is attached on the front side of the unit.

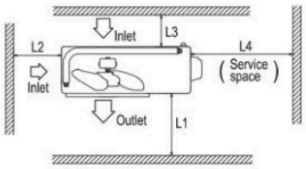


Minimum installation space

| Examples installation / Size | I | II | III | IV |
|---|---|---|---|---|
| L1 | Open | 280 | 280 | 180 |
| L2 | 100 | 75 | Open | Open |
| L3 | 100 | 80 | 80 | 80 |
| L4 | 250 | Open | 250 | Open |

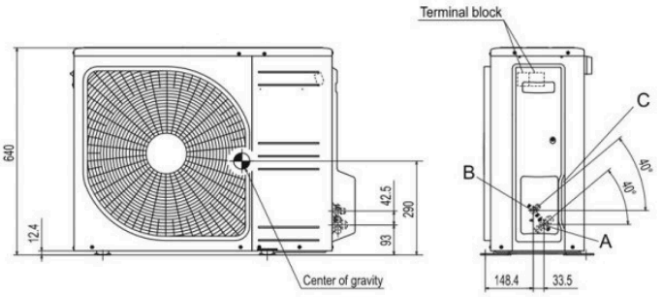


Unit:mm

(2) Outdoor units
Models SRC50ZSX-W3, 60ZSX-W3